ALL AMERICAN SCOREBOARDS

A Product of Everbrite 401 S. Main St. Pardeeville, WI 53901 (608)429-2121 / (800)356-8146

OPERATING INSTRUCTIONS AND SERVICE MANUAL

OUTDOOR PORTABLE SCOREBOARD

MODEL MP-6300

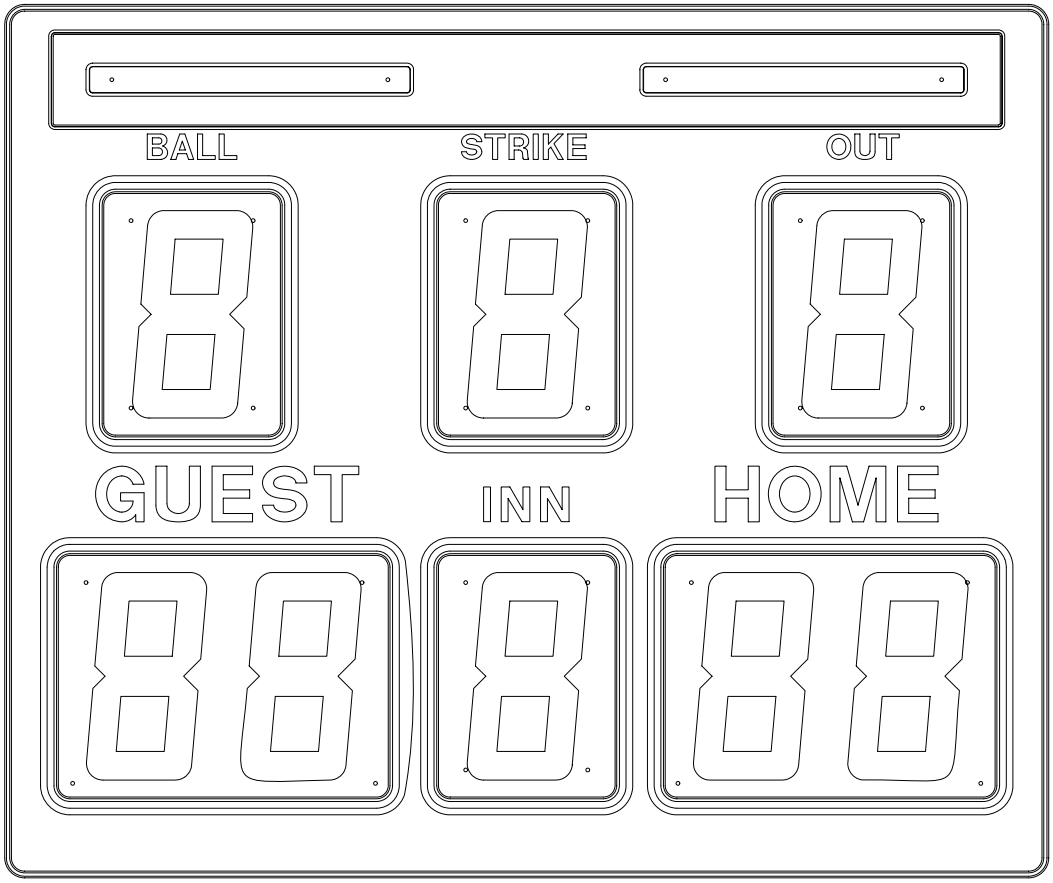

EFFECTIVE S.N.18,750, January, 2005

TABLE OF CONTENTS

		…..PAGE
1.	GENERAL INFORMATIO	3
	1.1 DESCRIPTION	
	1.2 IDENTIFICATION	
	1.3 DAMAGE	
	1.4DAMAGE CLAIM PROCEDURE	
2.	INSTALLATION	4
	2.1 GENERAL INFORMATION	
	2.2 INSPECTION	
3.	CONTROL CONSOLE OPERATION	4
	3.1 SCOREBOARD POWER	
	3.2 CONSOLE POWER	
	3.3 OPERATION	
4.	MAINTENANCE AND TROUBLESHOOTING	6
	4.1 INTRODUCTION	
	4.2 TEST EQUIPMENT	
	4.3 TROUBLESHOOTING	
	4.4 TROUBLESHOOTING GUIDE	
5.	REPLACEMENT PARTS LIST	8
	5.1 SCOREBOARD DISPLAY PARTS	
6.	DIAGRAMS	10
	6.1 CONTROL CONSOLE AND SLIPSHEET LAYOUT	

1. GENERAL INFORMATION

1.1 Description

Your All American Scoreboard has been carefully inspected and tested before leaving the factory. It is possible, however, that components may be loosened or forced out of adjustment in transit. If this occurs, follow the troubleshooting guide (section 4). If equipment then fails to operate, contact immediately:

ALL AMERICAN Service Department
EVERBRITE LLC
P.O. Box 100
Pardeeville, WI 53954
Telephone: (608) 429-2121
Toll Free: 800-356-8146
E-mail score@everbrite.com

Parts being returned for repair are to be sent to:

ALL AMERICAN Service Department
EVERBRITE LLC
401 S. Main Street
Pardeeville, WI 53954

NOTE
If you need to send parts in for repair, please call the ALL AMERICAN service department for a returned goods authorization (RGA) number.

1.2 Identification

The serial number tags are located inside of the battery compartment located on the back center of the scoreboard. When contacting the factory for assistance it is important that the model number and serial number are known.

1.3 Damage

Upon receipt, check for visible damage. If this occurs, or if damage is found after shipment has been accepted, follow the damage claim procedure.

1.4 Damage Claim Procedure

An instruction sheet is enclosed advising the consignee in case of damage in transit.

If damage is noted at the time of delivery, consignee must obtain an ‘Inspection of Bad Order’ from the delivering carrier. In order to process your claim, this must be properly filled out with a complete statement of all damage and it must be signed by the carrier.
If damage is discovered after delivery, you should call the delivery company. Have them make out a Concealed Damage Report. Fifteen days after delivery
are allowed, so this should be done promptly or it is impossible to process this claim.

Advise EVERBRITE corporation of necessary replacement parts or repairs.

Consignee will be invoiced and then should file a claim with the carrier to recover charges. To file your claim follow this procedure:

(A) Cost of replacement parts or repair charges are invoiced to the carrier by the consignee.

(B) The following documents, properly filled out, plus invoice are forwarded to the trucking company in support of your claim:

(a) Original bill of lading
(b) Original paid freight bill
(c) Certified copy of original invoice
(d) Standard form for presentation of loss and damage claim

2. INSTALLATION

2.1 General Information

Shipping papers accompany each scoreboard. Check carefully to see that you receive the following:

1 ea Scoreboard Display
1 ea Control Console
1 ea Service Manual
1 ea Display Stand
1 ea AC Power Adaptor
3 ea AAA Alkaline Batteries
1 ea 9.6V Battery and Charger
1 ea Fence Hanger

2.2 Inspection

Tighten all screws and fittings that may have loosened in shipment.

NOTE

This equipment complies with the requirements in part 15 of the FCC rules for a class A computing device. Operation of this equipment in a residential area may cause unacceptable interference to radio and television reception, requiring the operator to take whatever steps are necessary to correct the interference.

3. CONTROL CONSOLE OPERATION

3.1 Scoreboard Power

Plug the 9.6V rechargeable battery into the battery compartment located on the lower back center of the scoreboard. The battery must be inserted so that the velcro on the bottom of the battery connects to the velcro on the battery compartment. The battery power terminals will push into the metal prongs on the left-hand side. The negative power (ribbed side of battery) will be facing outward closest to the battery compartment cover. Push the red switch located on the back of the scoreboard down to turn the scoreboard on. The scoreboard will automatically light up. Push the red switch up to shut the scoreboard off. When the battery is low an “L” will appear in the period indicator. The scoreboard will automatically shut off when the battery is completely out of energy. The scoreboard may also be operated, by plugging the 12 VDC power supply into an A.C. outlet.

3.2 Console Power

The control console is supplied with 3 “AA” Alkaline batteries located on the back of the control console. The control console will automatically start functioning once the batteries have been inserted into the battery compartment. Replace the batteries when necessary.

NOTE

Replace batteries only as a set. (Alkaline preferred)

3.3 Operation

Refer to diagram 6.1 for keypad layout.

All functions can be changed in the following way:

Press repeatedly or hold: **HOME SCORE** or [ ] until desired

setting is reached.

To reset the score: Press **HOME SCORE** or [ ] followed by [ ]

An “**L**” appearing in the inning indicates a low battery condition.

4. MAINTENANCE AND TROUBLESHOOTING

4.1 Introduction

This section gives maintenance and troubleshooting information. Included are troubleshooting guides for typical scoreboard malfunctions. If the cause of a problem cannot be determined, please contact the customer service department.

4.2 Test Equipment

A simple analog or digital voltmeter will be sufficient for all user repairable problems. Printed circuit boards requiring troubleshooting should be returned to the factory.

4.3 Troubleshooting

Whenever possible, follow the troubleshooting guides prior to contacting the customer service department.

If a problem not described in the guides exists, contact the customer service department immediately.

Refer to the diagrams provided for assistance in troubleshooting scoreboard malfunctions.

4.4 Troubleshooting Guides

(A) Scoreboard doesn't display information:

(a) Check that the main red power switch is turned on.
(b) Check that the battery is installed correctly and has a good connection.
(c) Check the battery for charge or confirm that the AC Power Adaptor is plugged in properly.
(d) Contact the customer service department.

(B) Scoreboard console doesn't work:

(a) Check charge condition of batteries in console. Replace all three, if necessary.
(b) Ensure operating range is within specified parameters.
(c) Contact the customer service department.

5. REPLACEMENT PARTS

5.1 Scoreboard Display Parts

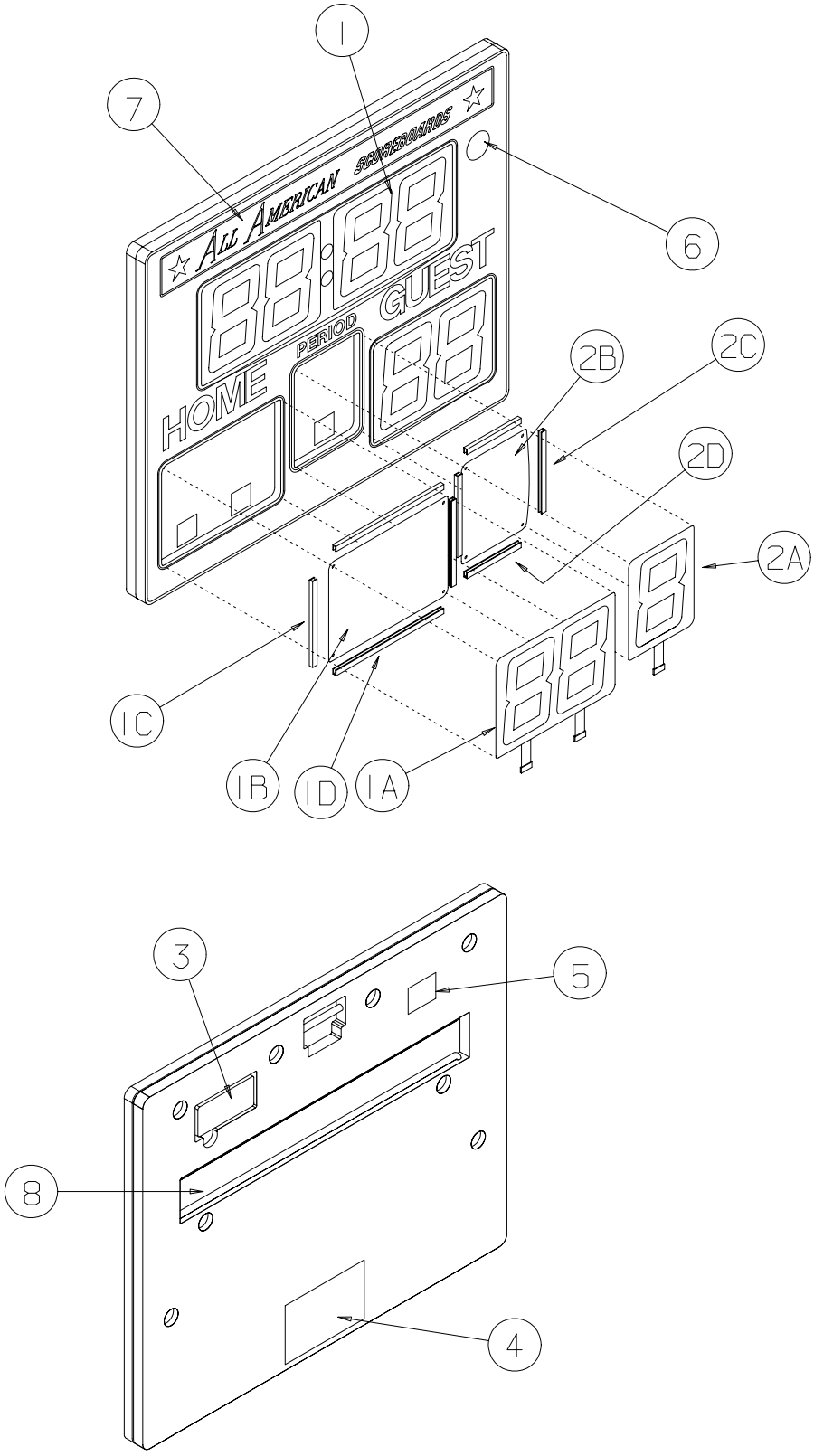

DISPLAY ASSEMBLY

REPLACEMENT PARTS LIST (MP-6300)

fig.& index	MFG PART NUMBER	DESCRIPTION	REF DES	VENDOR PART #
1-	151542	Display, MP-6300 Outdoor Portable		151542
1-1	151552	Digit, 7.75” LCD 0-99		151552
1-2	151551	Digit, 7.75” LCD 0-9		151551
1-3	151916	Control Console, MP-6000 Portable		151916
1- 3A	151549X	Battery Clip Assy, MP-6300		151549X
1-3B	MP00022	Battery, “AAA” Cell		MP00022
1-3C	MP00394P	Keypad, Membrane		MP00394P
1-3D	MP00397P	Enclosure, Hand-held Remote		MP00397P
1-3E	151918	PC Board Assy., MP-6000 Trans.		151918
1-4	151547	Door, MP-6400 Battery Storage		151547
1-5	EL00538P	Battery, 9.6 Volt		EL00528P
1-5A	151548	Switch Plate Assy, MP 6400		151548
1-5B	EL00306P	Switch, DPDT Rocker		EL00306P
1-5C	EL00476P	Con, 2.1mm Power Jack		EL00476P
1-6				
1-7	151545	Ad Panel		151545
1-8	151543	Stand, Portable Scoreboard		151543
1-9	151919	PC Board Assy, MP-6000 Controller		151919
1-10	151550	Ribbon Cable Assy, 20C		151550
1-11	MP00305P	Battery Charger, W/ Battery		MP00305P
1-12	121859	Adaptor, AC 12V./500 MA		121859

6. DIAGRAMS

6.1 Control Console Keyboard and Slipsheet Layout

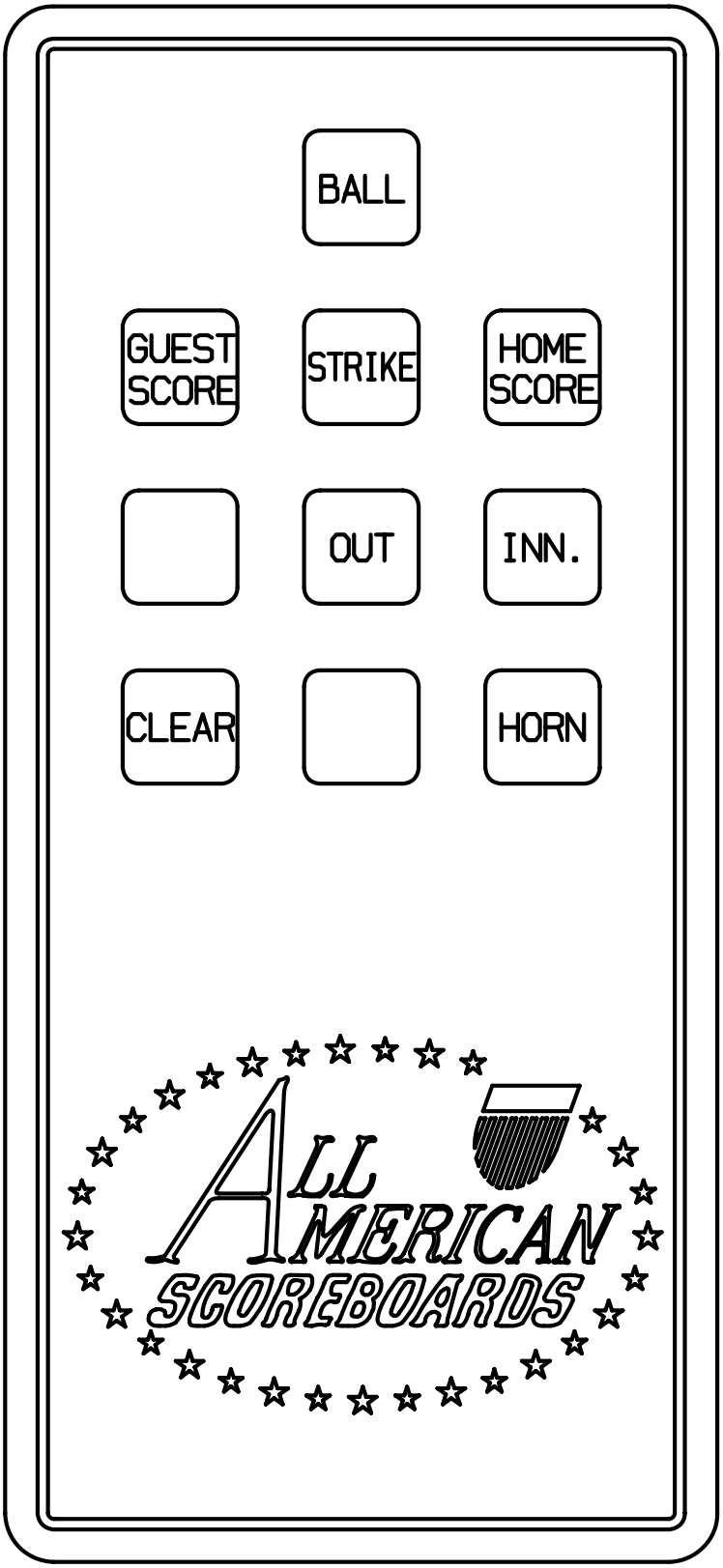

CONSOLE KEYBOARD